OROS

LINAMAR

Power to Perform

ISO9001 CERTIFIED VINÇOTTE

OROS

KUKORICABETAKARÍTÓ ADAPTER
PÓTALKATRÉSZJEGYZÉK

КУКУРУЗНАЯ ЖАТКА
ПЕРЕЧЕНЬ ЗАПАСНЫХ ЧАСТЕЙ

CORN HEAD SPARE PART LIST

MAISPFLÜCKERVORSATZ
ERSATZTEILLISTE

CUEILLEUR A MAÏS CATALOGUE
DES PIECES DE RECHANGE

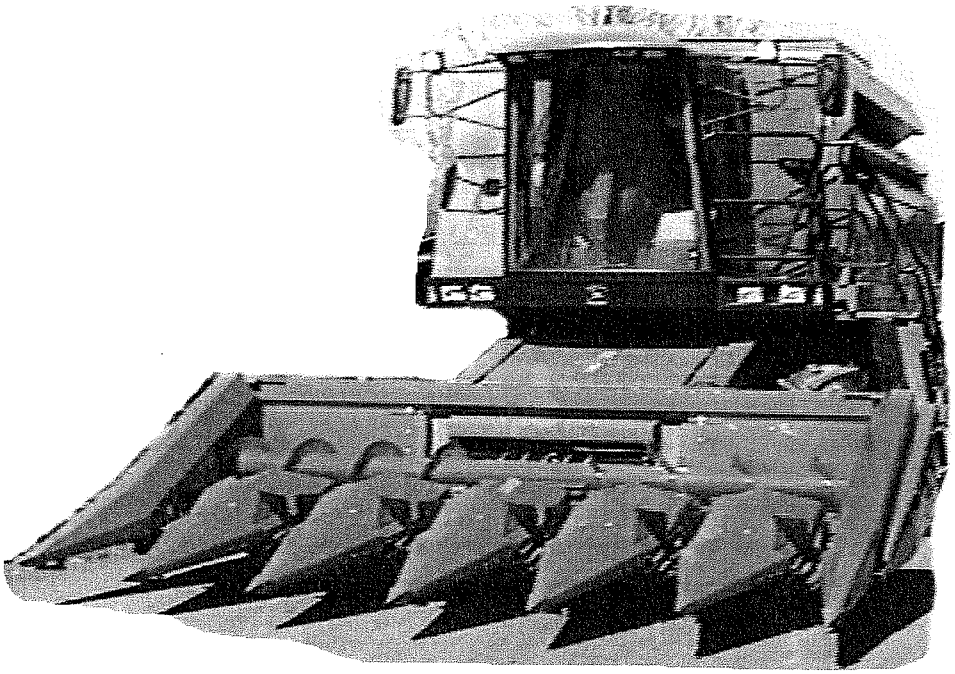

Phone: (36 68) 514 600

Fax: (36 68) 514 692

2011.---

OROS - 6244+ HSA CLAAS LEXION СОДЕРЖАНИЕ

1.326.605

742.	Рама в сборе
743.	Шнек в сборе
756.	Вал в сборе, левый-правый
869.	Привод боковой –77.5/80cm-
871.	Привод боковой -6R 70/72/75/76.2cm
890.	Звездочки
826.	Натяжение цепи
930.	Русло в сборе
873.	Редуктор
874.	Детали русла
875.	Детали редуктора
950.	HSA в сборе
865.	Механизм регулировки отрывочных пластин
717.	Кронштейны, соединители русел
932.	Обшивка средняя, пластиковая 70 cm
942.	Обшивка средняя, пластиковая 76,2 cm
840.	Обшивка боковая, пластиковая
758.	Обшивка передняя правая
759.	Обшивка передняя левая
963.	Проставка в комплекте
624.	Комплект этикеток
867.	Режущий узел для подсолнечника
931.	Автоматическая смазка
915.	Повышенная боковина

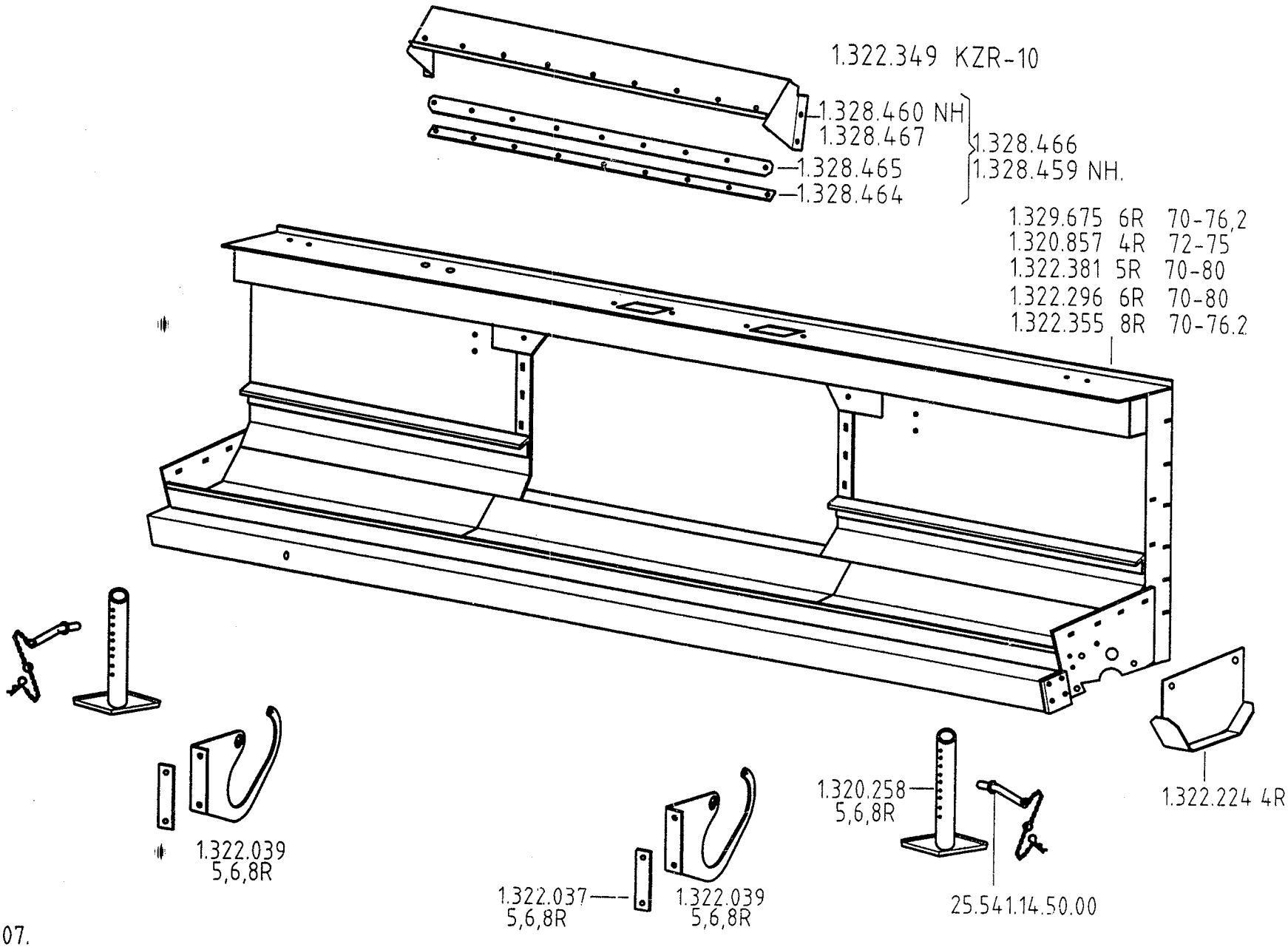
1.322.349 KZR-10
1.328.460 NH
1.328.467
1.328.465
1.328.464
1.328.466
1.328.459 NH.
1.329.675 6R 70-76,2
1.320.857 4R 72-75
1.322.381 5R 70-80
1.322.296 6R 70-80
1.322.355 8R 70-76.2
1.322.224 4R
1.322.039
5,6,8R
1.322.037
5,6,8R
1.322.039
5,6,8R
1.320.258
5,6,8R
25.541.14.50.00

2007.

742

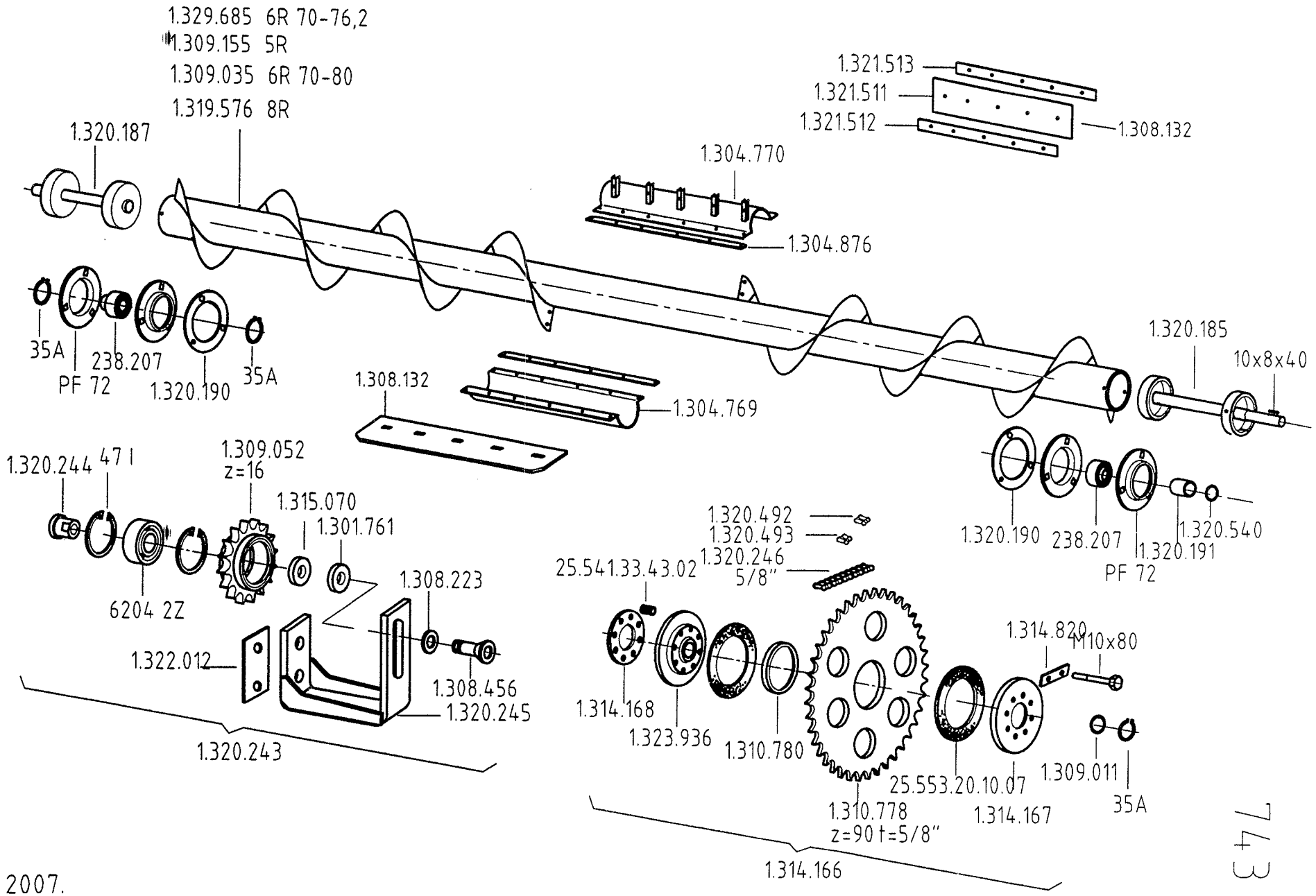
1.329.685 6R 70-76,2
1.309.155 5R
1.309.035 6R 70-80
1.319.576 8R
1.320.187
1.321.513
1.321.511
1.321.512
1.308.132
1.304.770
1.304.876
35A
PF 72
238.207
1.320.190
35A
1.308.132
1.304.769
1.320.185
10x8x40
1.320.244
47 I
1.309.052
z=16
1.315.070
1.301.761
6204 2Z
1.308.223
1.322.012
1.308.456
1.320.245
1.320.243
1.320.492
1.320.493
1.320.246
5/8"
25.541.33.43.02
1.320.190
238.207
1.320.191
1.320.540
PF 72
1.314.820
M10x80
1.314.168
1.323.936
1.310.780
25.553.20.10.07
1.309.011
35A
1.310.778
z=90 t=5/8"
1.314.167
1.314.166

2007.

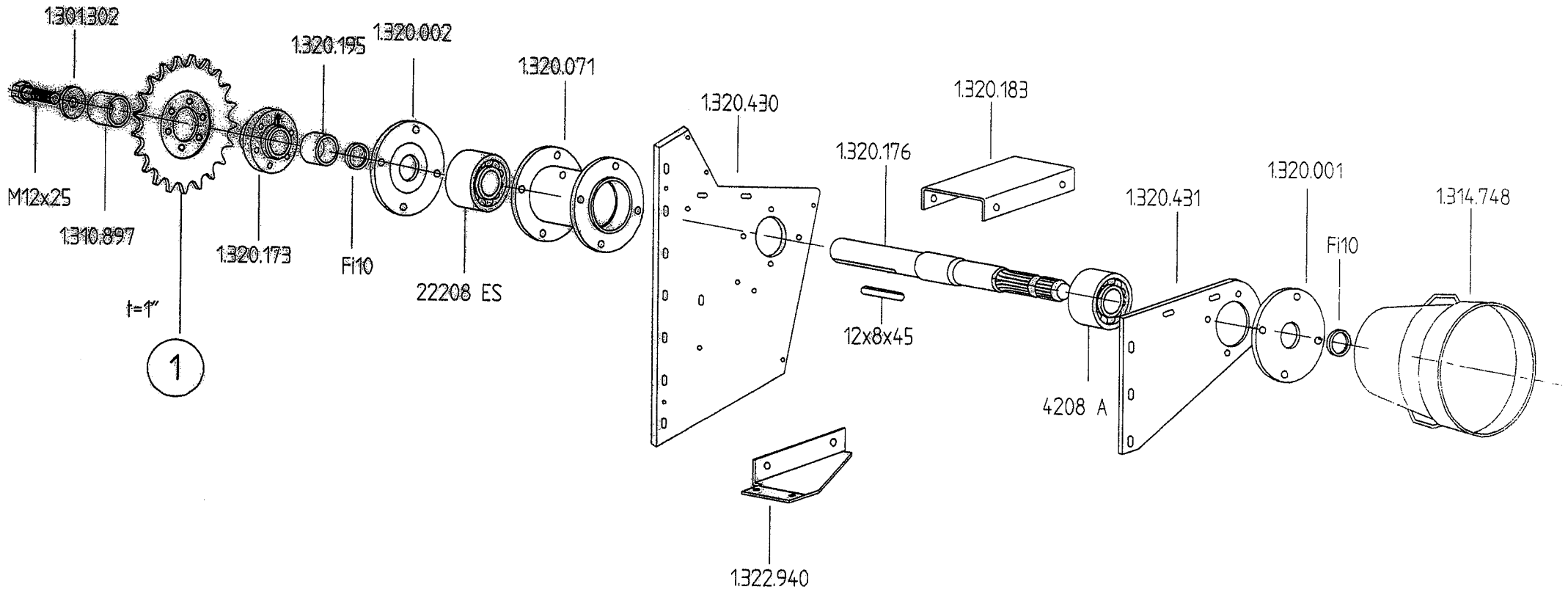
1.301.302
M12x25
1.310.897
t=1"
1
1.320.173
1.320.195
Fi10
1.320.002
22208 ES
1.320.071
1.320.430
1.322.940
1.320.176
12x8x45
1.320.183
4208 A
1.320.431
1.320.001
Fi10
1.314.748

2001.

756

1.326.127	l=139	5R/76.2cm
1.322.966	l=104	6R/77.5cm
1.322.966	l=104	5R/77.5cm
1.322.964	l=70	5R/80cm
1.322.964	l=70	6R/80cm
1.322.964	l=70	6R/76,2cm /70-76,2/
1.322.964	l=70	6R/100cm /91.4-100/
1.322.964	l=70	8R/76.2cm /70-76.2/
1.322.964	l=70	8R/96.5cm /91.4-96.5/

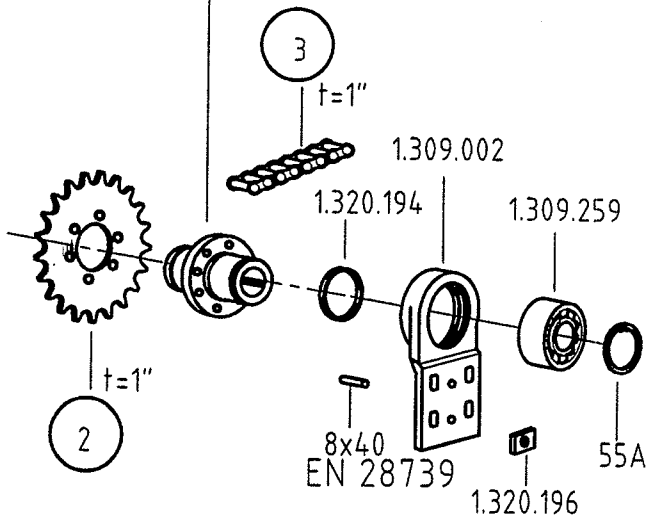

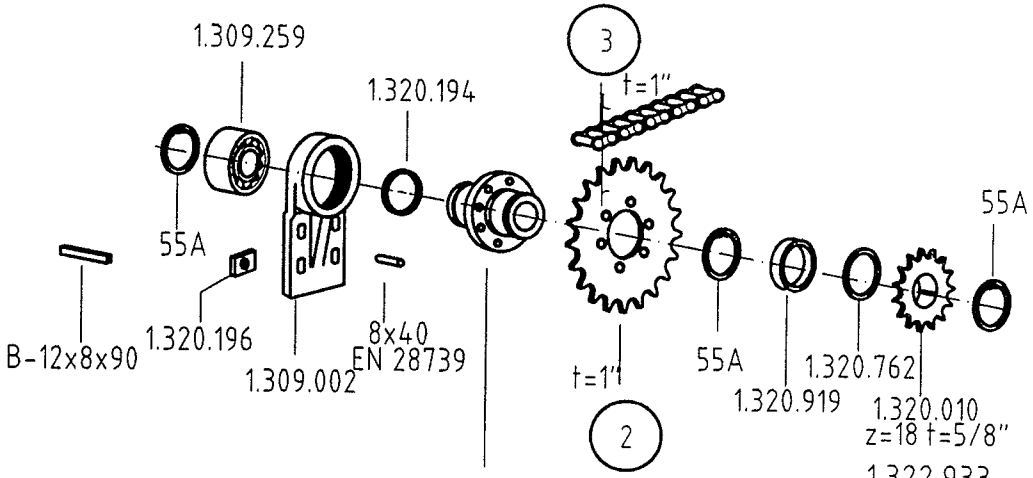

1.326.124	l=176	5R/76.2cm	
1.322.965	l=141	6R/77.5cm	
1.322.965	l=141	5R/77.5cm	
1.322.963	l=106	5R/80cm	
1.322.963	l=106	6R/80cm	
1.322.963	l=106	6R/100cm	/91.4-100/
1.322.963	l=106	6R/76,2cm	/70-76,2/
1.322.963	l=106	8R/76.2cm	/70-76.2/
1.322.963	l=106	8R/96.5	/91.4-96.5/

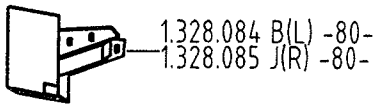

5R-6R/76.2
5-6-R/77.5/80cm
6R/100cm
8R/76.2/96.5cm

2007.

698

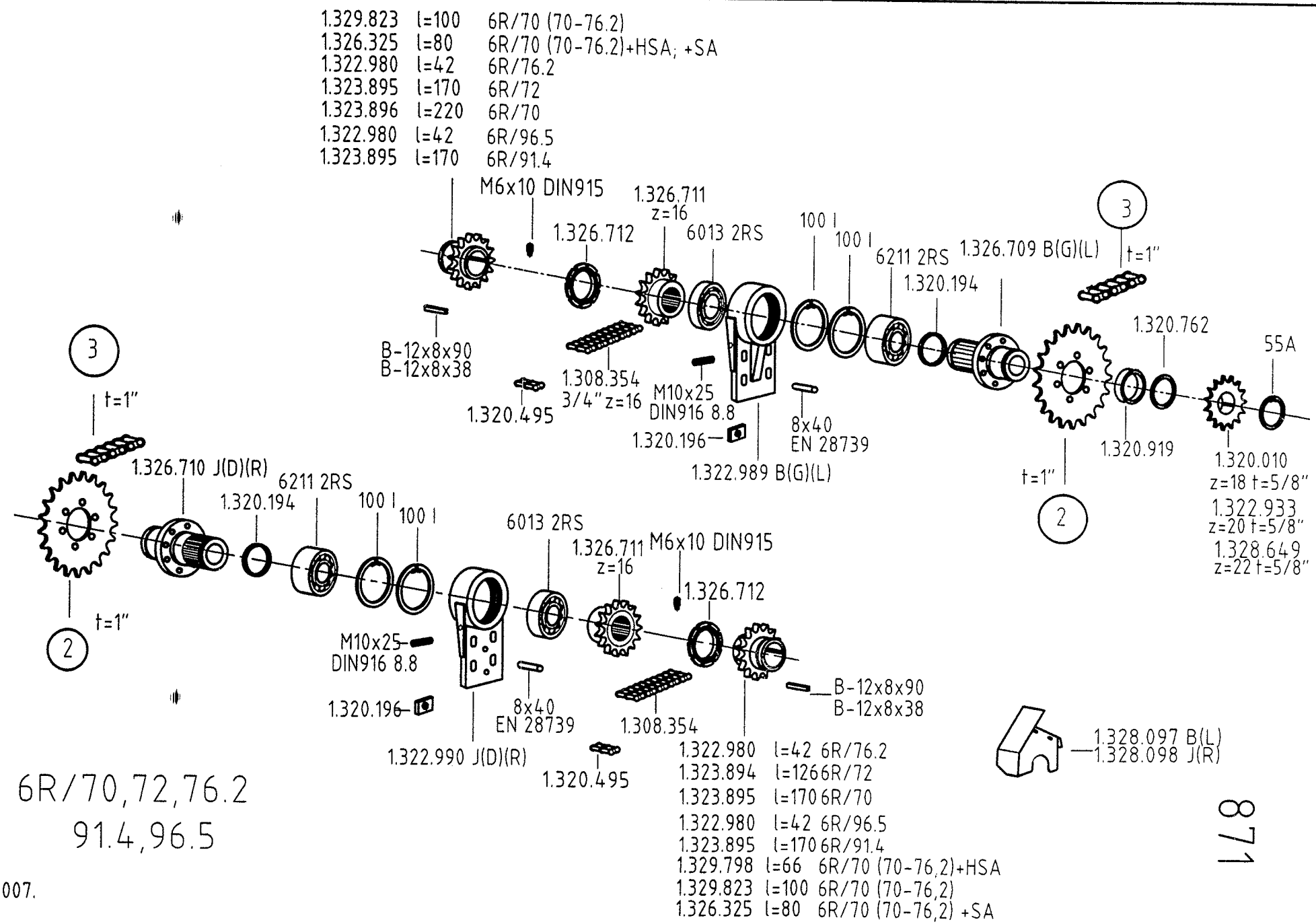
1.329.823 l=100 6R/70 (70-76.2)
1.326.325 l=80 6R/70 (70-76.2)+HSA; +SA
1.322.980 l=42 6R/76.2
1.323.895 l=170 6R/72
1.323.896 l=220 6R/70
1.322.980 l=42 6R/96.5
1.323.895 l=170 6R/91.4
M6x10 DIN915
1.326.711 z=16
1.326.712
6013 2RS
100 I
100 I
6211 2RS
1.326.709 B(G)(L)
t=1"
1.320.194
1.320.762
55A
B-12x8x90
B-12x8x38
1.308.354
3/4" z=16
M10x25
DIN916 8.8
1.320.495
1.320.196
8x40
EN 28739
1.322.989 B(G)(L)
1.320.919
1.320.010
z=18 t=5/8"
1.322.933
z=20 t=5/8"
1.328.649
z=22 t=5/8"
1.326.710 J(D)(R)
6211 2RS
1.320.194
100 I
100 I
6013 2RS
1.326.711 z=16
M6x10 DIN915
1.326.712
M10x25
DIN916 8.8
1.320.196
8x40
EN 28739
1.322.990 J(D)(R)
1.320.495
1.308.354
B-12x8x90
B-12x8x38
1.322.980 l=42 6R/76.2
1.323.894 l=126 6R/72
1.323.895 l=170 6R/70
1.322.980 l=42 6R/96.5
1.323.895 l=170 6R/91.4
1.329.798 l=66 6R/70 (70-76,2)+HSA
1.329.823 l=100 6R/70 (70-76,2)
1.326.325 l=80 6R/70 (70-76,2) +SA
1.328.097 B(L)
1.328.098 J(R)
6R/70,72,76.2
91.4,96.5
2007.
871

OROS + SA

1	2	3	HALF EYE	PATENT EYE
1.320.013 z=16 t=1"	1.326.251 z=21 t=1"	1.320.486 x=103 t=1"	1.320.488 t=1"	1.320.489 t=1"
1.320.252 z=17	—	—	—	—

SA

1.307.367 z=24 t=3/4"	1.307.341 z=18 t=3/4"	1.307.373 x=107 t=3/4"	1.320.494 t=3/4"	1.320.495 t=3/4"

OROS + HSA

1	2	3	HALF EYE	PATENT EYE
1.307.495 z=27 t=3/4"	1.307.497 z=30 t=3/4"	1.315.435 x=143 t=3/4"	1.320.494 t=3/4"	1.320.495 t=3/4"
1.307.499 z=25 t=3/4"				

CLAAS LEXION

2006.

068

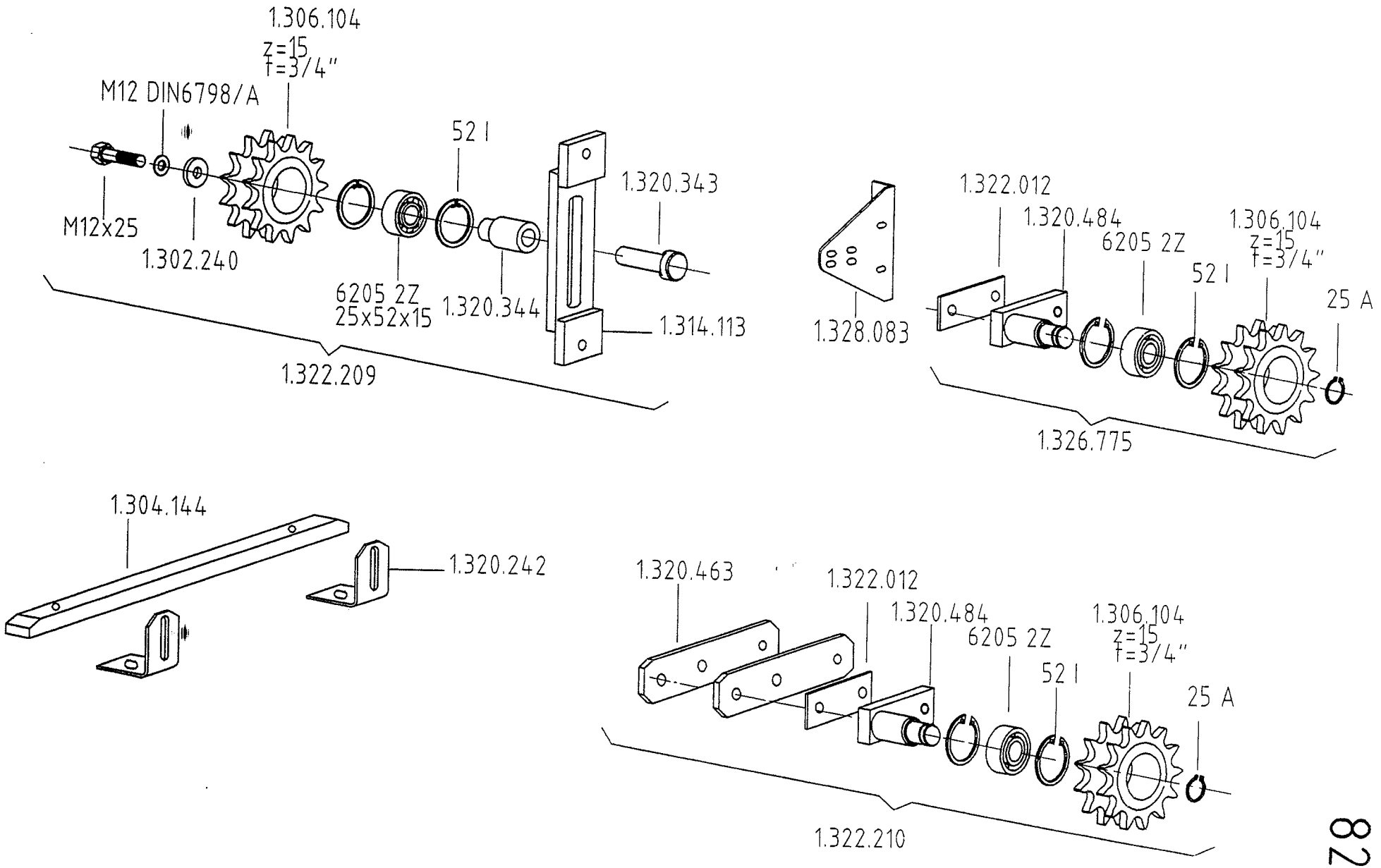
1.306.104
z=15
f=3/4"
M12 DIN6798/A
52 I
1.320.343
M12x25
1.302.240
6205 2Z
25x52x15
1.320.344
1.314.113
1.322.209
1.322.012
1.320.484
6205 2Z
1.306.104
z=15
f=3/4"
52 I
25 A
1.328.083
1.326.775
1.304.144
1.320.242
1.320.463
1.322.012
1.320.484
6205 2Z
1.306.104
z=15
f=3/4"
52 I
25 A
1.322.210

2004.

826

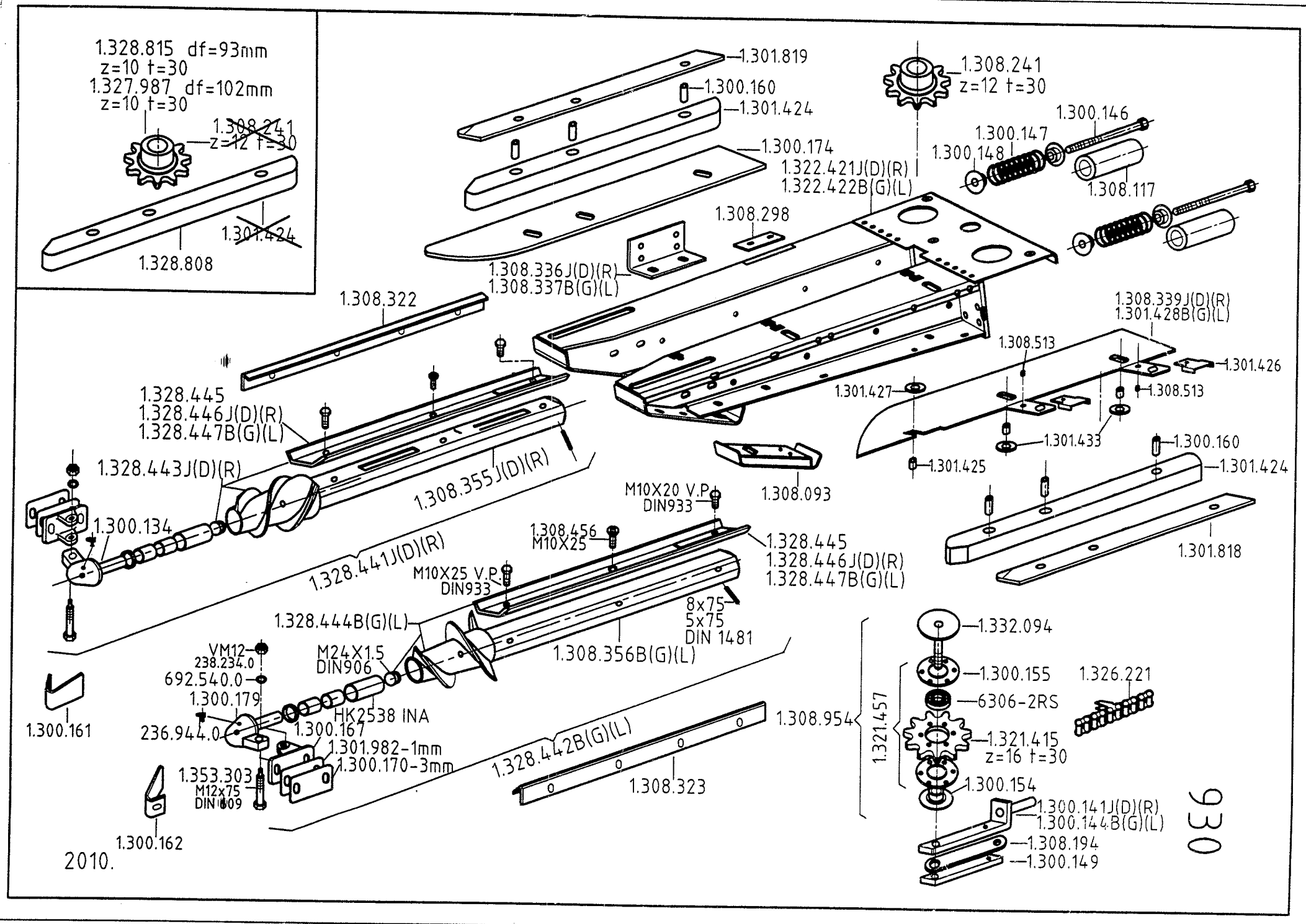
1.328.815 df=93mm
z=10 t=30
1.327.987 df=102mm
z=10 t=30
1.308.241
z=12 t=30
1.301.424
1.328.808
1.301.819
1.300.160
1.301.424
1.300.174
1.322.421J(D)(R)
1.322.422B(G)(L)
1.308.298
1.308.336J(D)(R)
1.308.337B(G)(L)
1.308.241
z=12 t=30
1.300.146
1.300.147
1.300.148
1.308.117
1.308.322
1.308.339J(D)(R)
1.301.428B(G)(L)
1.308.513
1.301.426
1.301.427
1.308.513
1.301.433
1.301.425
1.300.160
1.301.424
1.301.818
1.328.445
1.328.446J(D)(R)
1.328.447B(G)(L)
1.328.443J(D)(R)
1.308.355J(D)(R)
1.308.093
M10X20 V.P.
DIN933
1.300.134
1.308.456
M10X25
1.328.445
1.328.446J(D)(R)
1.328.447B(G)(L)
1.328.441J(D)(R)
M10X25 V.P.
DIN933
8x75
5x75
DIN 1481
1.328.444B(G)(L)
1.308.356B(G)(L)
VM12
238.234.0
692.540.0
M24X1.5
DIN906
1.300.179
HK2538 INA
1.300.161
236.944.0
1.300.167
1.301.982-1mm
1.300.170-3mm
1.353.303
M12x75
DIN 609
1.300.162
1.328.442B(G)(L)
1.308.323
1.308.954
1.321.457
1.332.094
1.300.155
1.326.221
6306-2RS
1.321.415
z=16 t=30
1.300.154
1.300.141J(D)(R)
1.300.144B(G)(L)
1.308.194
1.300.149
930
2010.

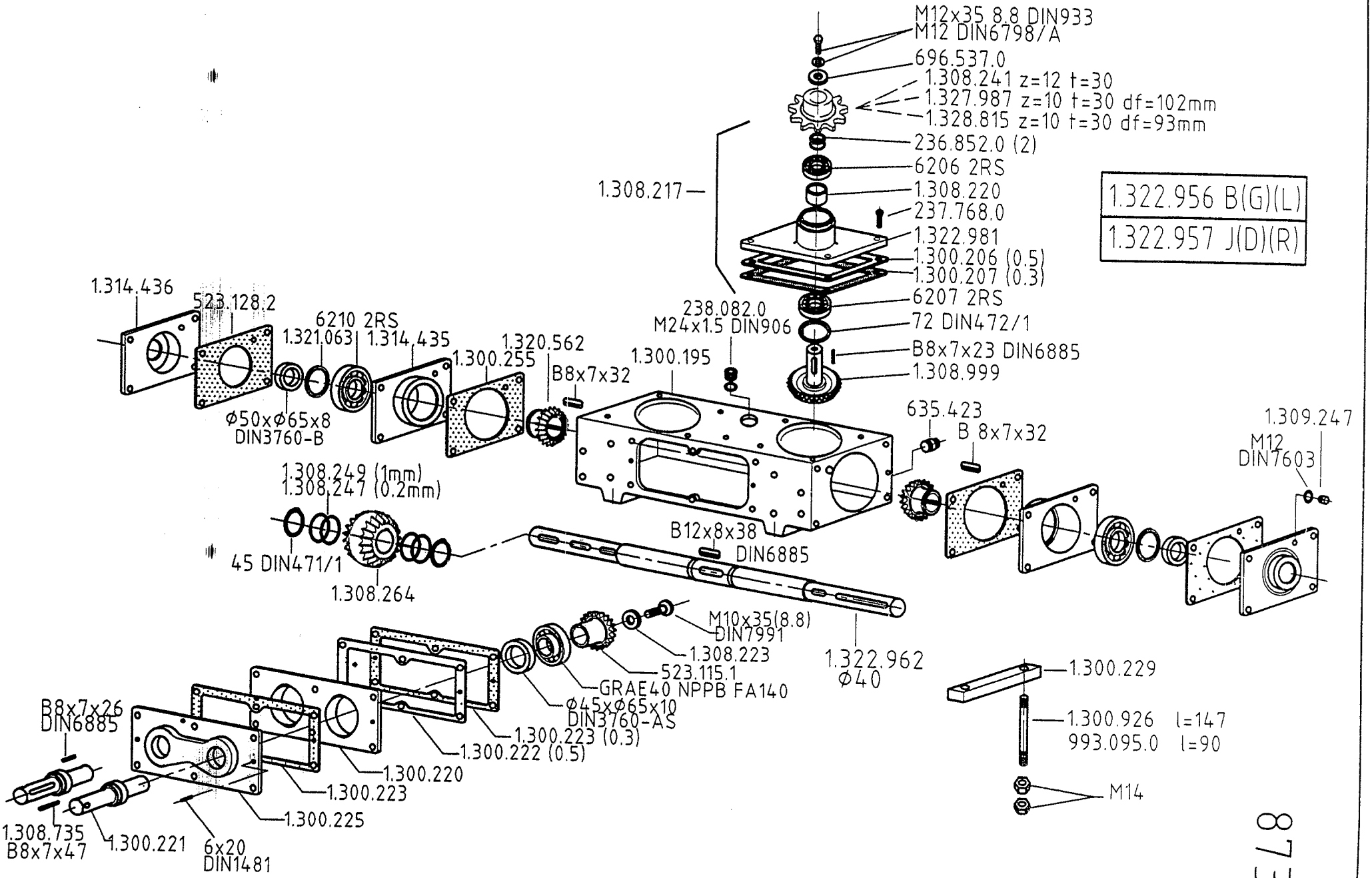
M12x35 8.8 DIN933
M12 DIN6798/A
696.537.0
1.308.241 z=12 t=30
1.327.987 z=10 t=30 df=102mm
1.328.815 z=10 t=30 df=93mm
236.852.0 (2)
6206 2RS
1.308.220
237.768.0
1.322.981
1.300.206 (0.5)
1.300.207 (0.3)
6207 2RS
72 DIN472/1
B8x7x23 DIN6885
1.308.999
1.308.217
1.322.956 B(G)(L)
1.322.957 J(D)(R)
238.082.0
M24x1.5 DIN906
1.314.436
523.128.2
6210 2RS
1.321.063
1.314.435
1.300.255
1.320.562
B8x7x32
1.300.195
Ø50xØ65x8
DIN3760-B
635.423
B 8x7x32
1.309.247
M12
DIN7603
1.308.249 (1mm)
1.308.247 (0.2mm)
45 DIN471/1
1.308.264
B12x8x38
DIN6885
1.322.962
Ø40
M10x35(8.8)
DIN7991
1.308.223
523.115.1
GRAE40 NPPB FA140
Ø45xØ65x10
DIN3760-AS
1.300.223 (0.3)
1.300.222 (0.5)
1.300.220
1.300.223
1.300.225
B8x7x26
DIN6885
1.308.735
B8x7x47
1.300.221
6x20
DIN1481
1.300.229
1.300.926 l=147
993.095.0 l=90
M14
2010.

873

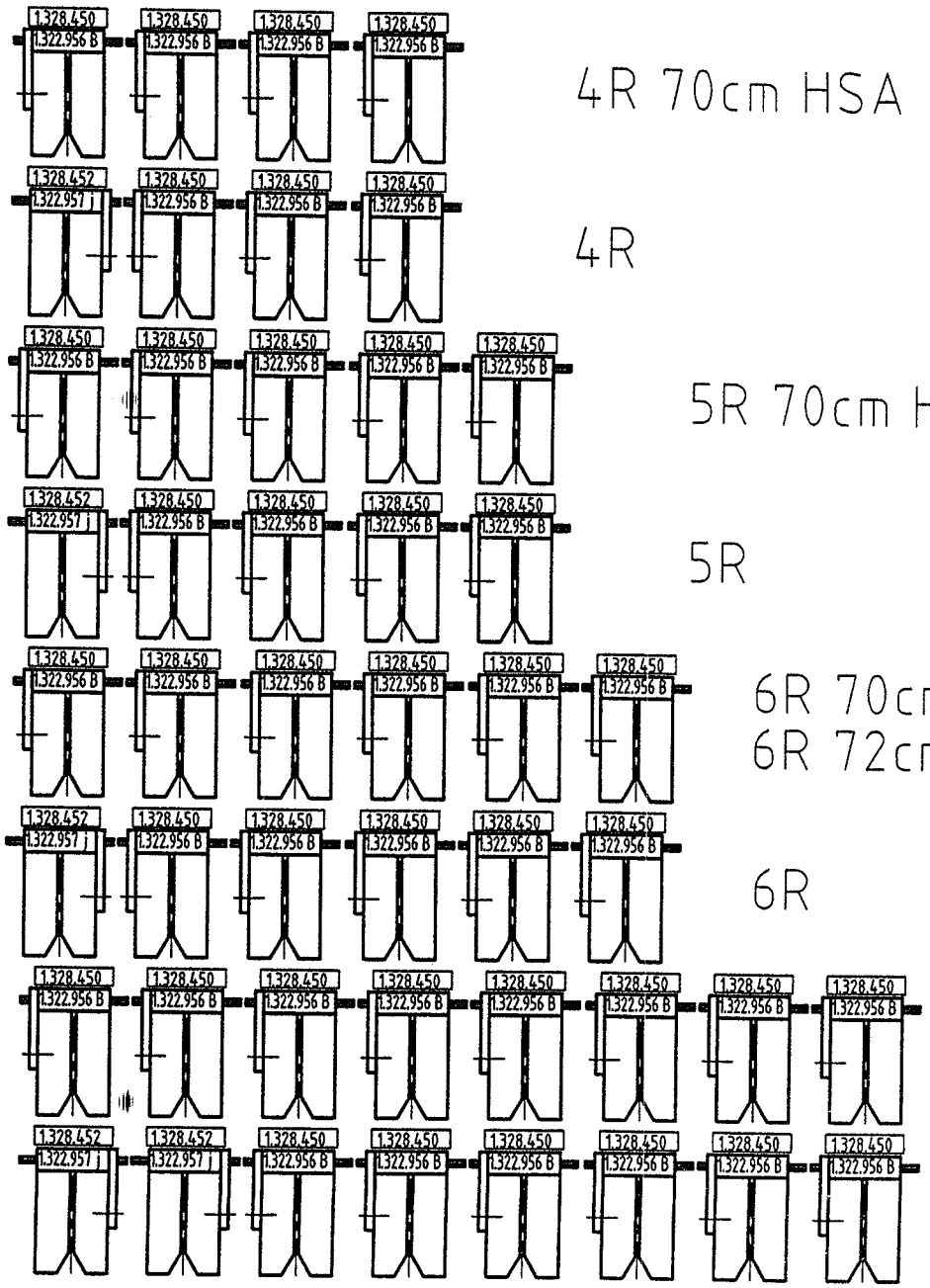

4R 70cm HSA

4R

5R 70cm HSA

5R

6R 70cm HSA
6R 72cm HSA

6R

8R 70cm HSA

8R

2010

874

1.329.432 181 mm 4,5,6,8R/70 CM+HSA (70-76,2)
1.316.910 236 mm 4+2X2/3X70+4X72 SOLO; HSA 6R/70 SOLO (70-76,2)
1.314.658 201mm 4,5,6R/72 CM+HSA
1.314.659 146mm 4,5,6R/72+HSA; 4+2X2/3X70+4X72CM+HSA
1.314.660 243mm 4,5,6R/76,2+HSA
1.314.661 188mm 5,6,4+2R/76,2 CM +HSA
1.314.662 256mm 4,5,6/72 CM; 4+2X2/3X70+4X72
1.314.663 298mm 4,5,6,8,4+2X2R/76,2; 4+2X2R/80CM
1.314.664 281mm 5,6R/80 CM+HSA
1.314.665 226mm 4,5,6,4+2,4+2X2/80 CM+HSA
1.314.666 336mm 5,6,8R/80CM SOLO; 4+2,4+2X2/80CM+HSA; 6R,8R/91,4CM+HSA
1.307.397 290mm 4,5,6R/70CM+SA

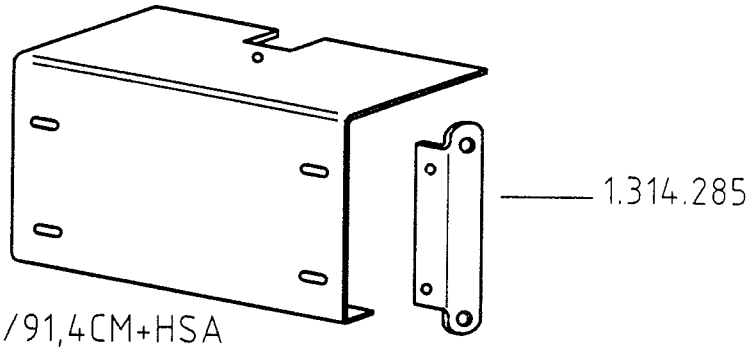

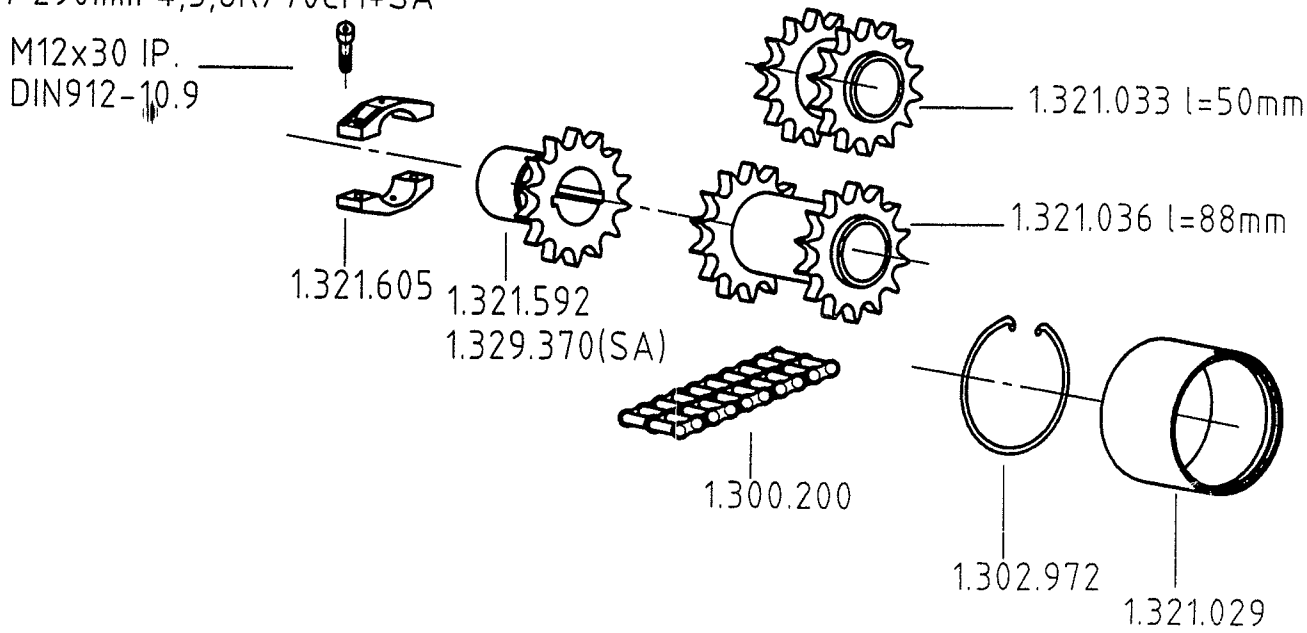

2007.

875

1.321.154 B(G)(L)
1.321.153 J(D)(R)

950

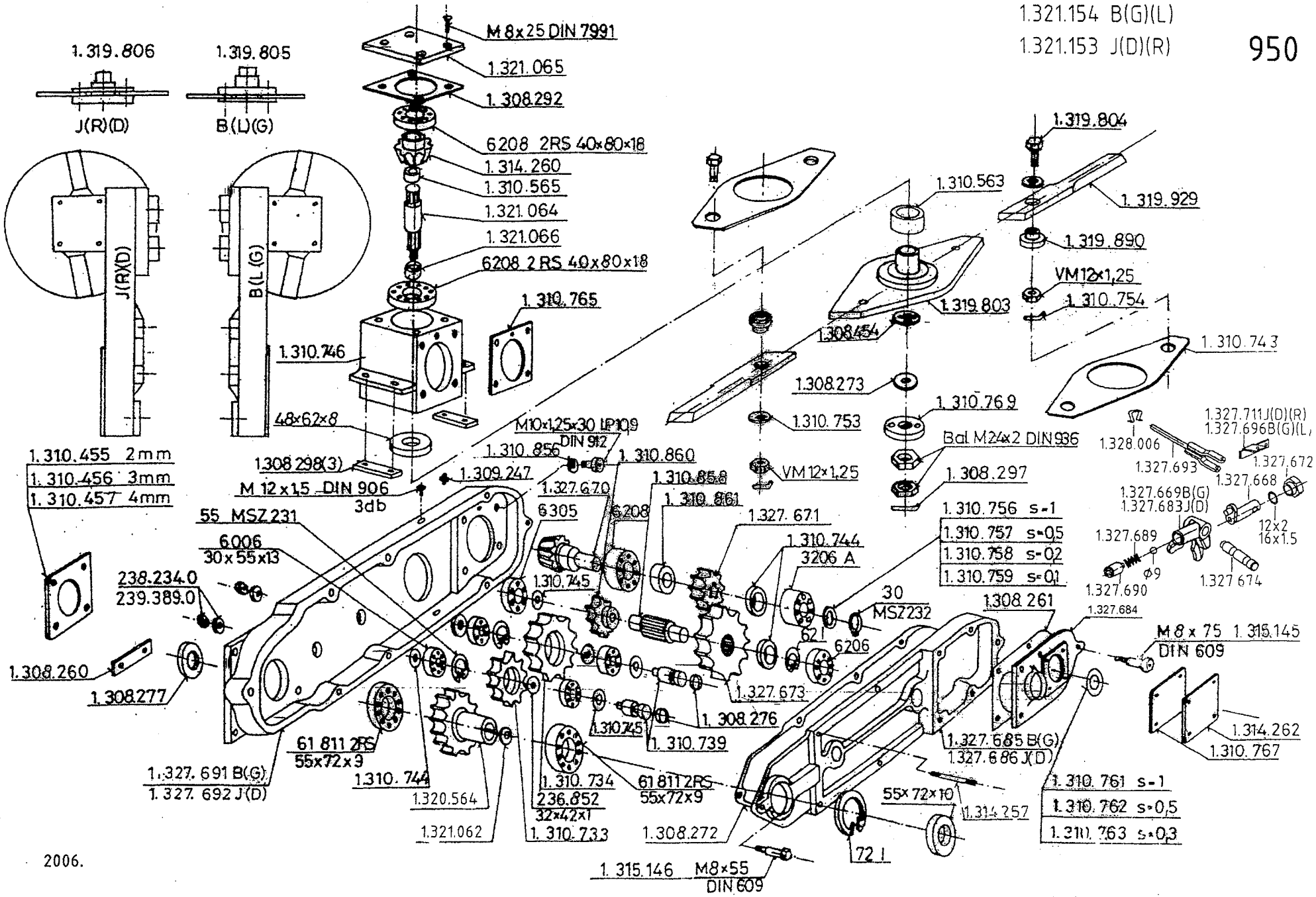

2006.

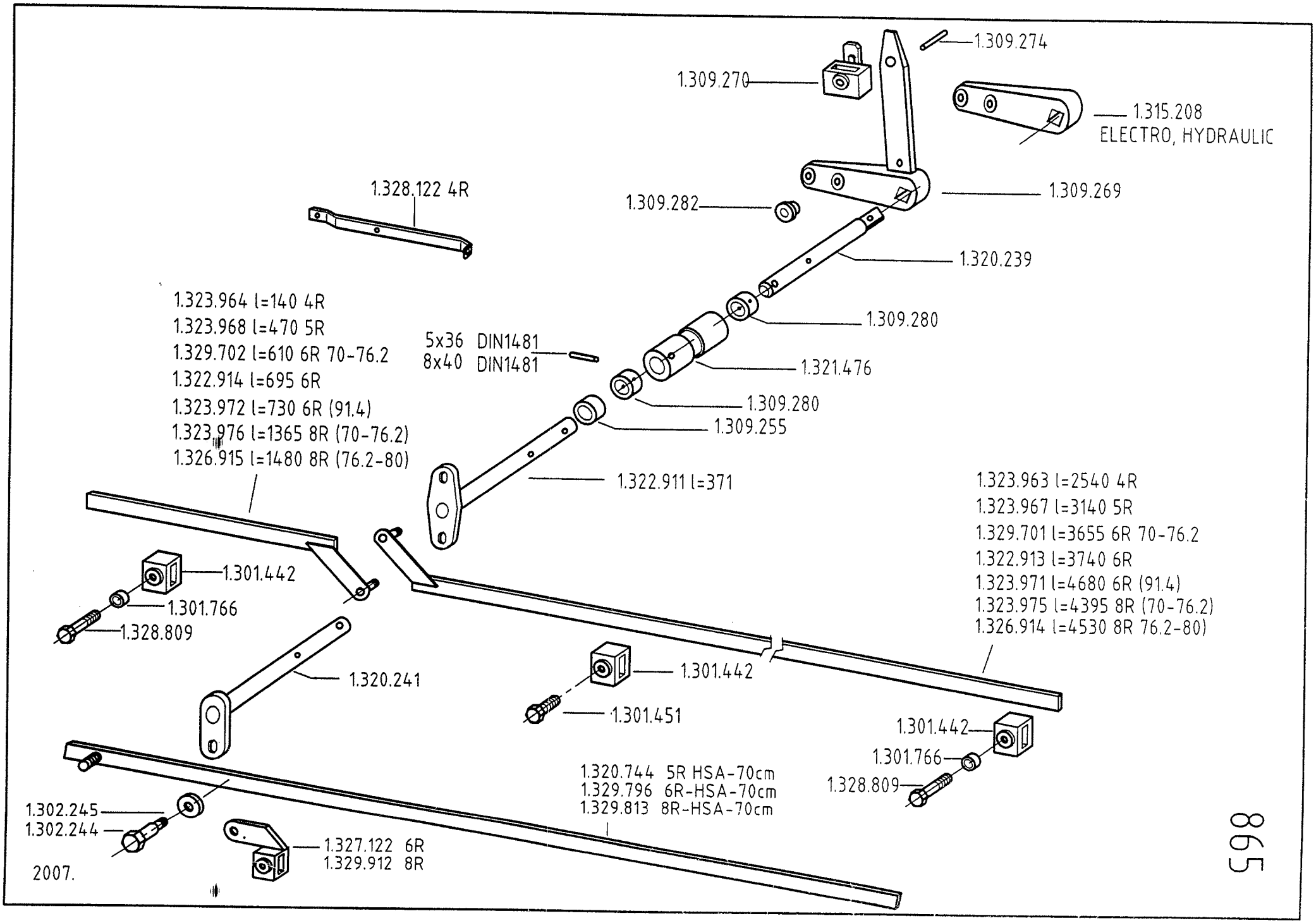
1.309.274
1.309.270
1.315.208
ELECTRO, HYDRAULIC
1.328.122 4R
1.309.282
1.309.269
1.320.239
1.323.964 l=140 4R
1.323.968 l=470 5R
1.329.702 l=610 6R 70-76.2
1.322.914 l=695 6R
1.323.972 l=730 6R (91.4)
1.323.976 l=1365 8R (70-76.2)
1.326.915 l=1480 8R (76.2-80)
5x36 DIN1481
8x40 DIN1481
1.309.280
1.321.476
1.309.280
1.309.255
1.322.911 l=371
1.323.963 l=2540 4R
1.323.967 l=3140 5R
1.329.701 l=3655 6R 70-76.2
1.322.913 l=3740 6R
1.323.971 l=4680 6R (91.4)
1.323.975 l=4395 8R (70-76.2)
1.326.914 l=4530 8R 76.2-80)
1.301.442
1.301.766
1.328.809
1.320.241
1.301.442
1.301.451
1.301.442
1.301.766
1.328.809
1.320.744 5R HSA-70cm
1.329.796 6R-HSA-70cm
1.329.813 8R-HSA-70cm
1.302.245
1.302.244
1.327.122 6R
1.329.912 8R
2007.

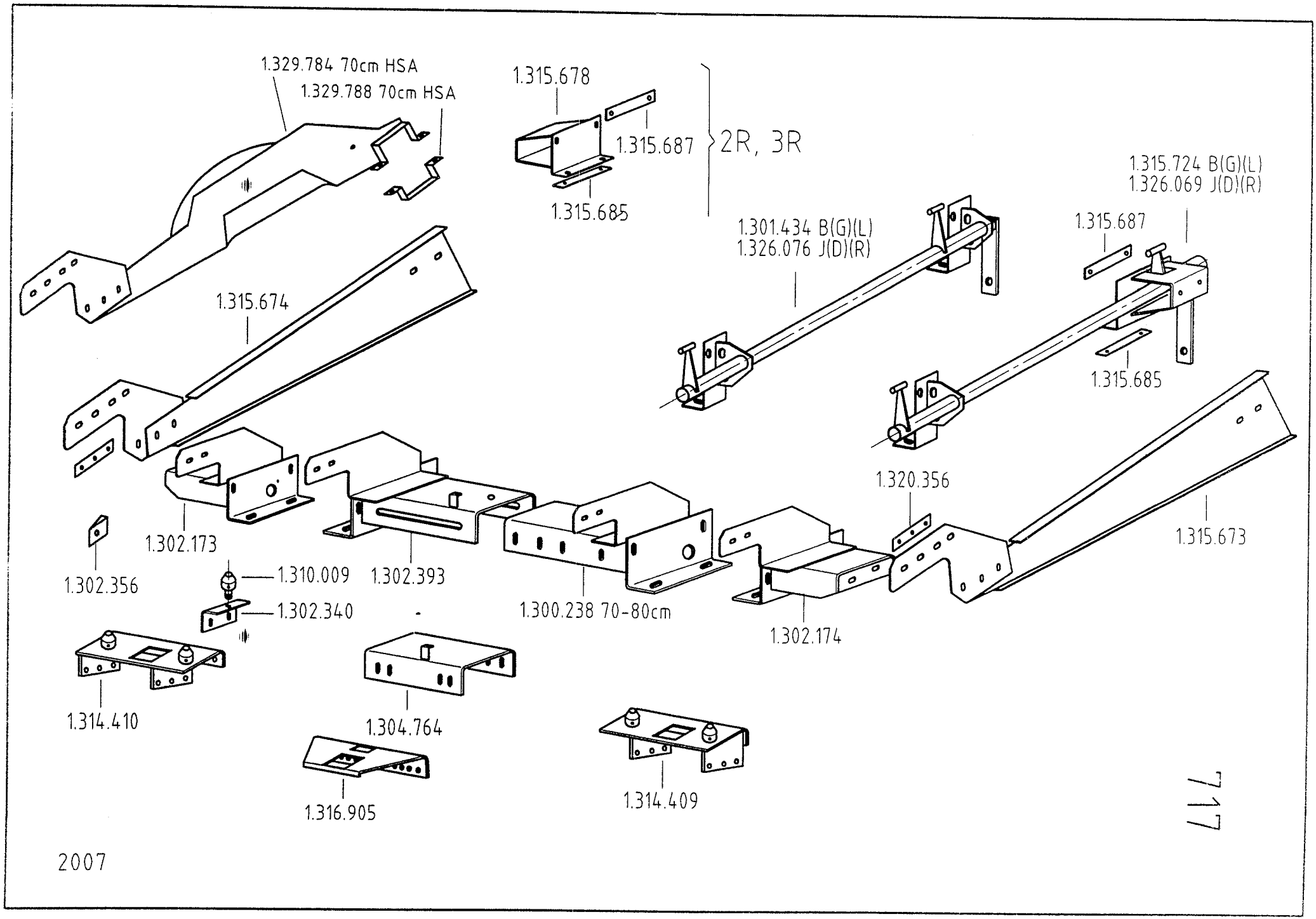
1.329.784 70cm HSA
1.329.788 70cm HSA
1.315.678
1.315.687
1.315.685
2R, 3R
1.315.724 B(G)(L)
1.326.069 J(D)(R)
1.301.434 B(G)(L)
1.326.076 J(D)(R)
1.315.687
1.315.674
1.315.685
1.320.356
1.315.673
1.302.173
1.302.356
1.310.009
1.302.393
1.302.340
1.300.238 70-80cm
1.302.174
1.314.410
1.304.764
1.316.905
1.314.409
2007

2007.

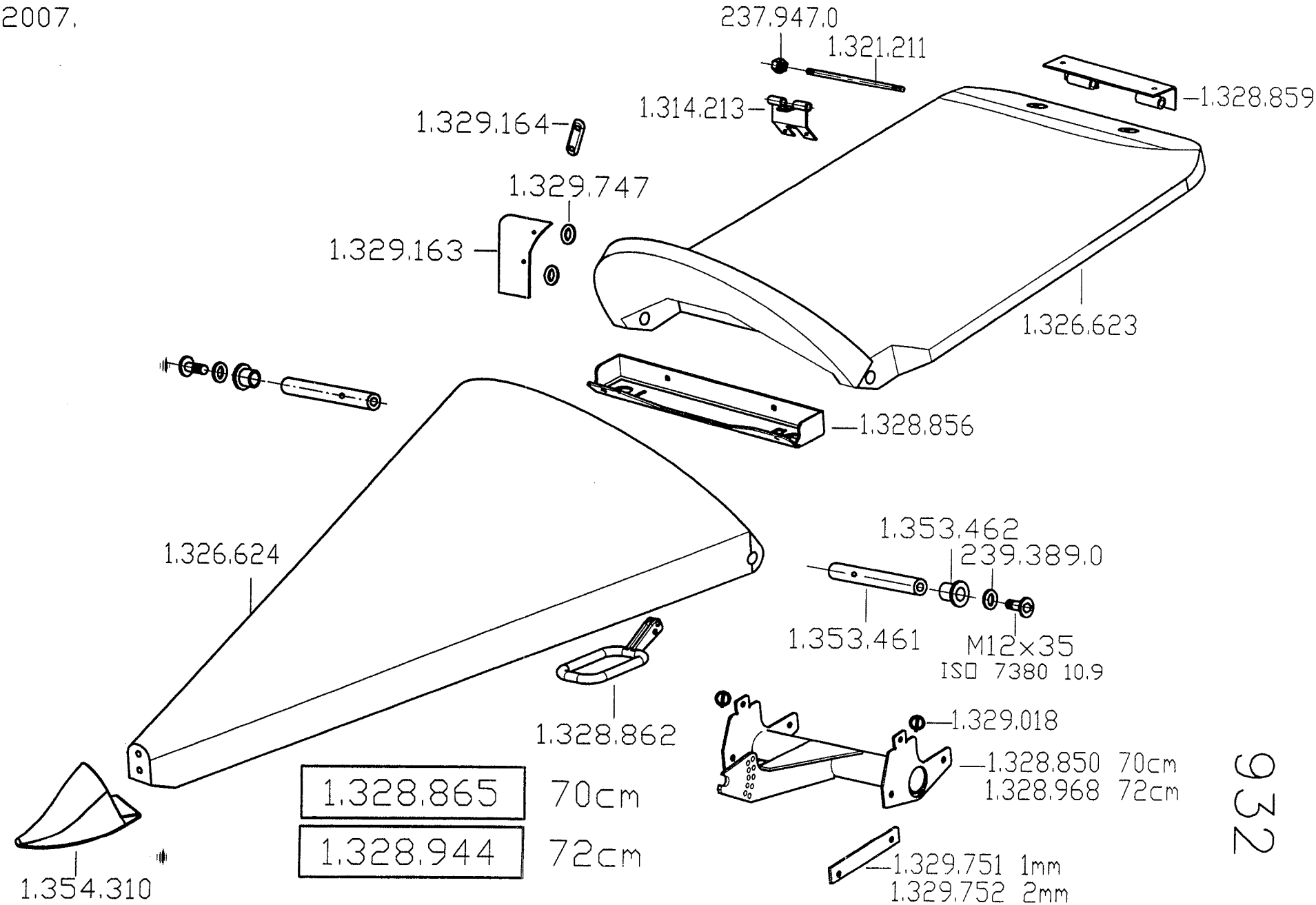

1.328.865	70cm
1.328.944	72cm

932

2007.

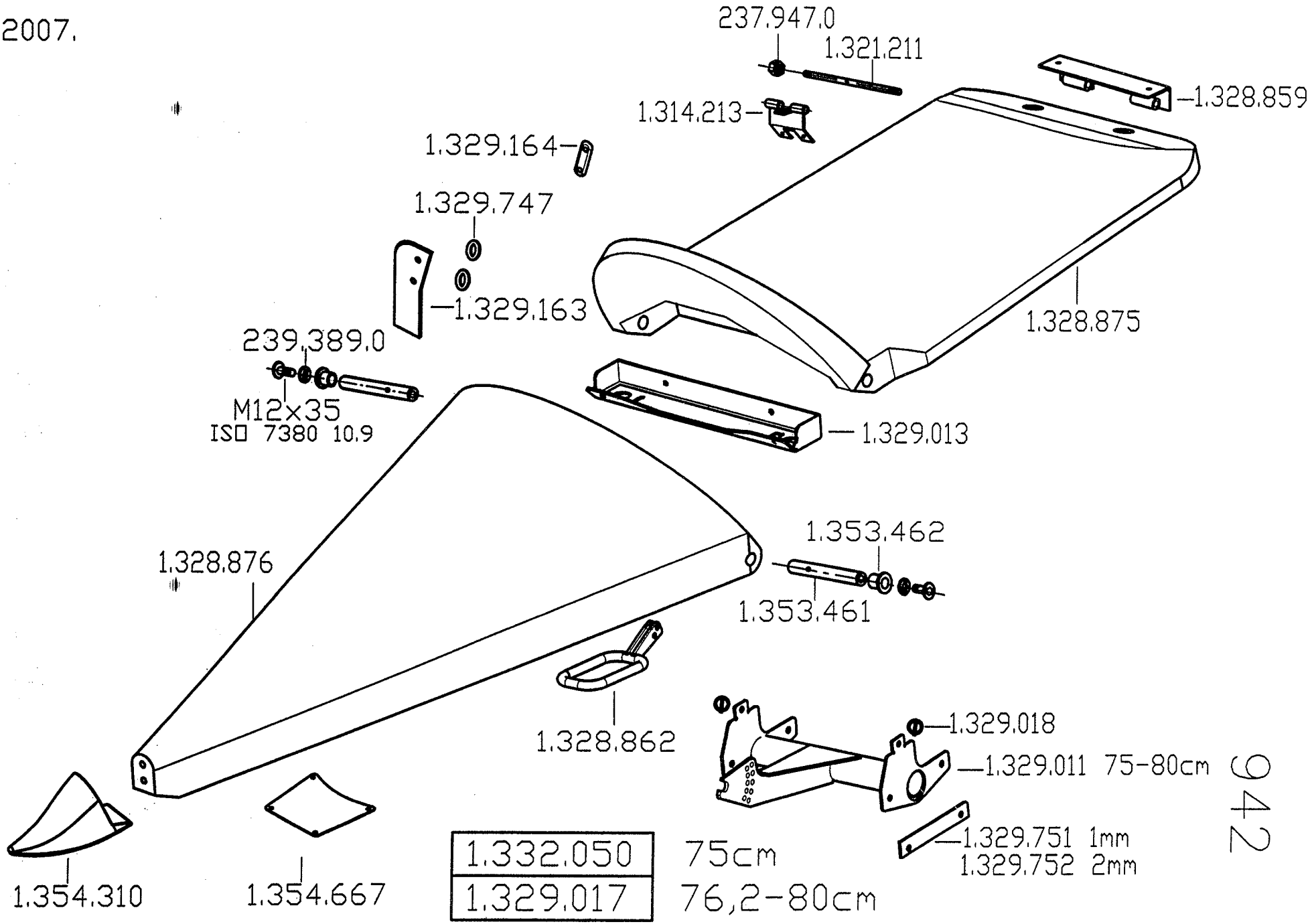

1.332.050	75cm
1.329.017	76,2-80cm

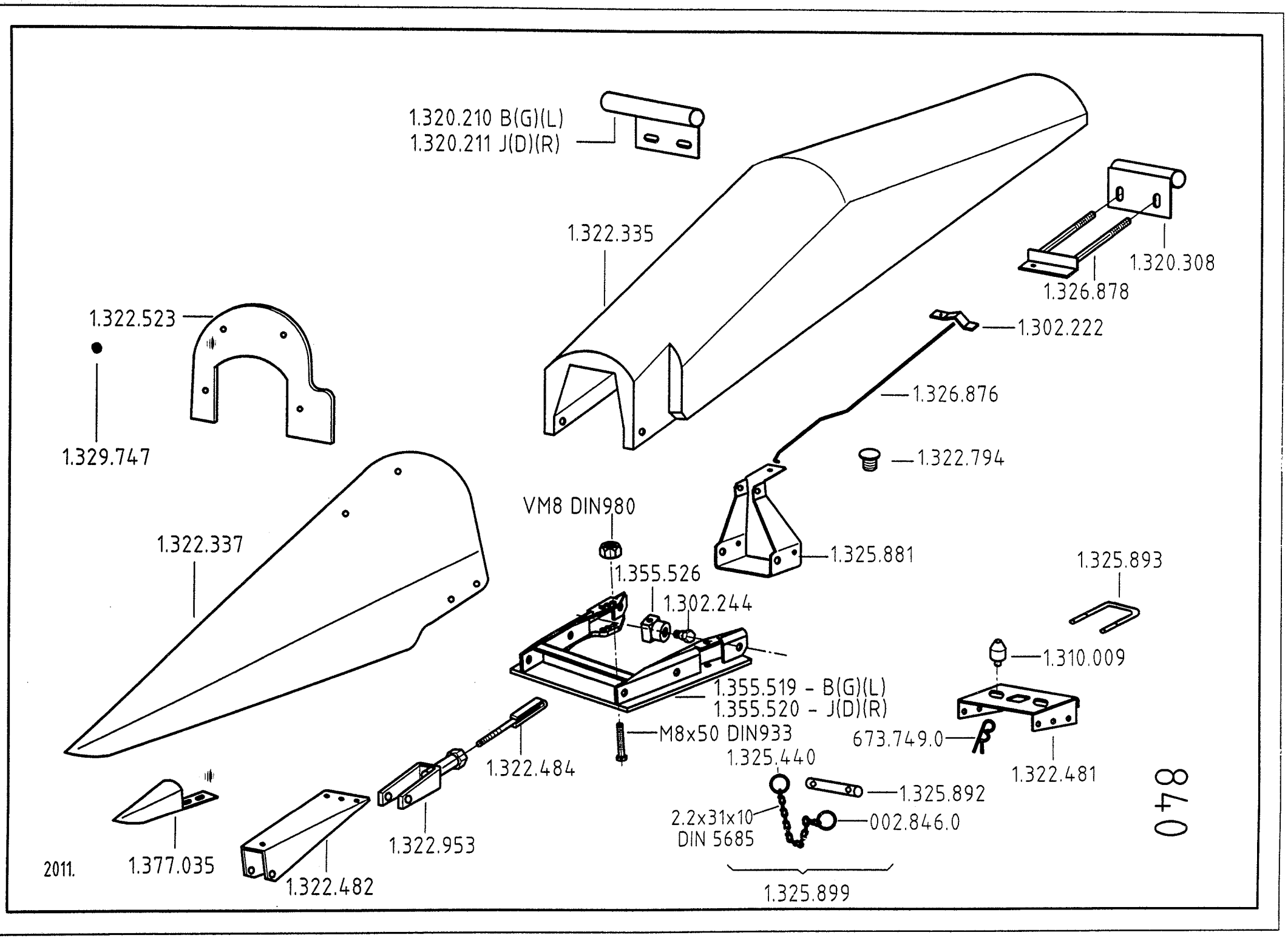
1.320.210 B(G)(L)
1.320.211 J(D)(R)
1.322.335
1.320.308
1.326.878
1.322.523
1.302.222
1.326.876
1.329.747
1.322.794
VM8 DIN980
1.322.337
1.325.881
1.355.526
1.325.893
1.302.244
1.310.009
1.355.519 - B(G)(L)
1.355.520 - J(D)(R)
M8x50 DIN933
673.749.0
1.322.484
1.325.440
1.322.481
1.325.892
2.2x31x10
DIN 5685
002.846.0
1.322.953
1.377.035
1.322.482
1.325.899
2011.
840

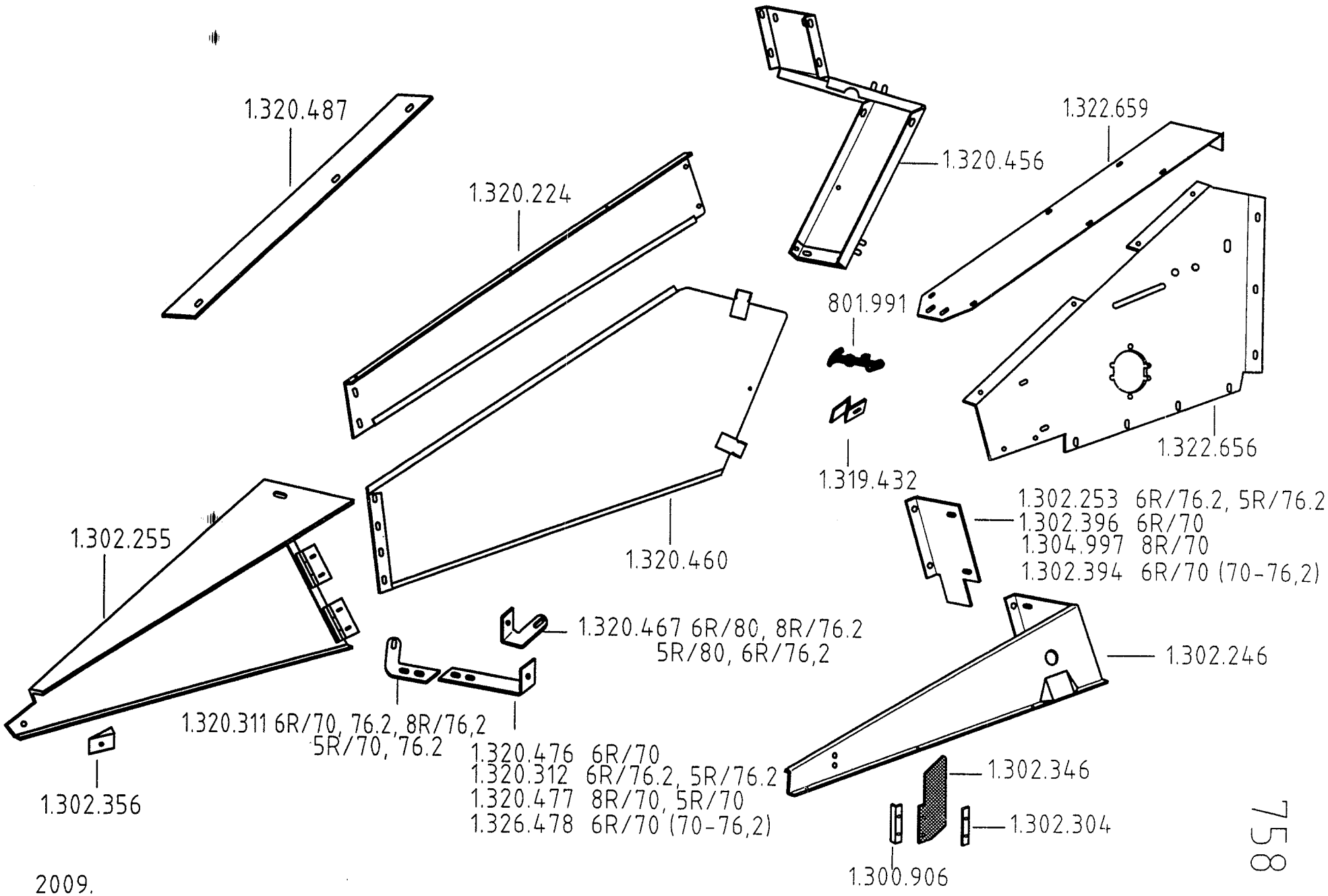
1.320.487
1.320.224
1.320.456
1.322.659
801.991
1.322.656
1.319.432
1.302.253 6R/76.2, 5R/76.2
1.302.396 6R/70
1.304.997 8R/70
1.302.394 6R/70 (70-76,2)
1.302.255
1.320.460
1.320.467 6R/80, 8R/76.2
5R/80, 6R/76,2
1.302.246
1.320.311 6R/70, 76.2, 8R/76,2
5R/70, 76.2
1.320.476 6R/70
1.320.312 6R/76.2, 5R/76.2
1.320.477 8R/70, 5R/70
1.326.478 6R/70 (70-76,2)
1.302.346
1.302.304
1.302.356
1.300.906

2009.

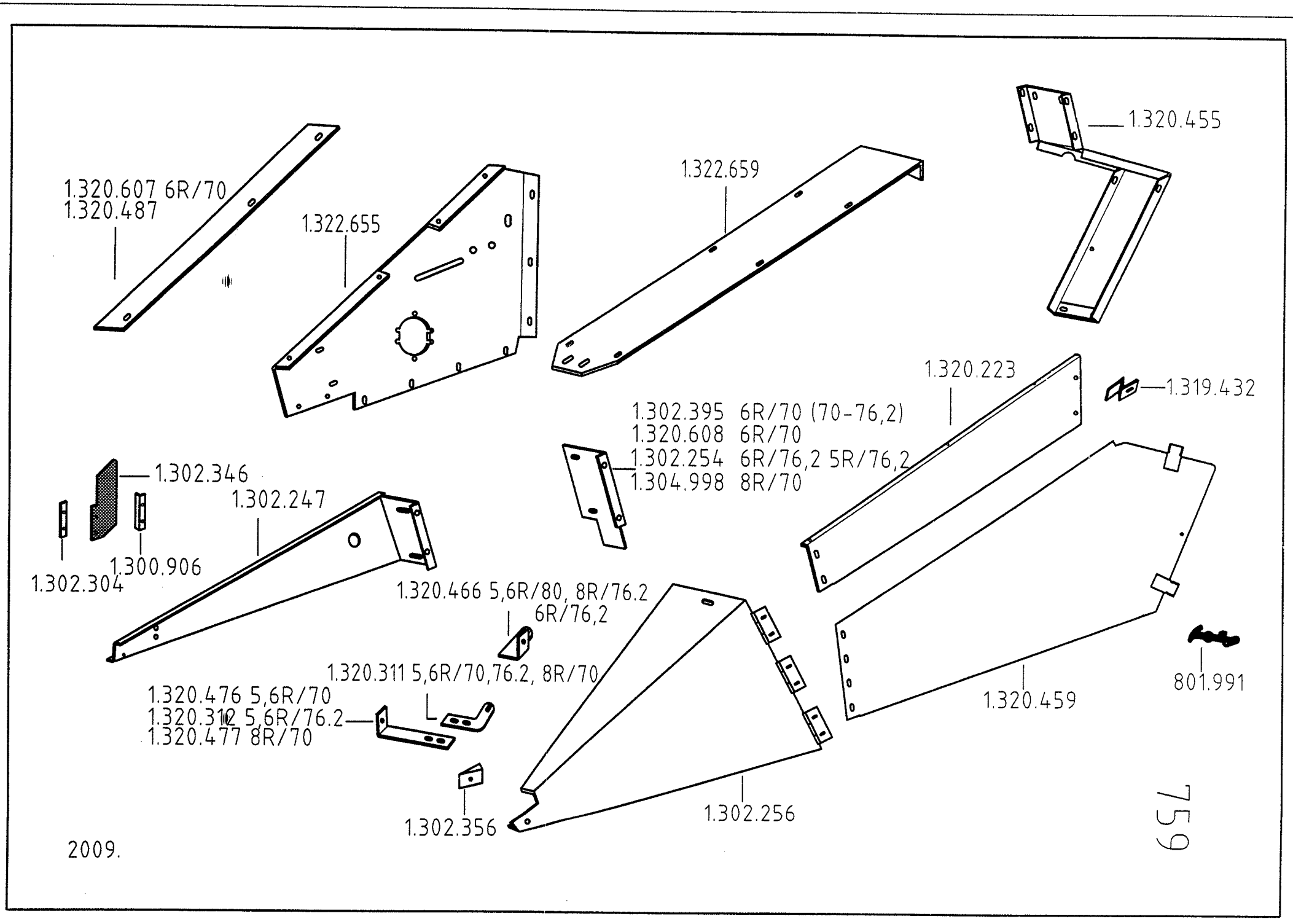
1.320.607 6R/70
1.320.487
1.322.655
1.322.659
1.320.455
1.320.223
1.319.432
1.302.395 6R/70 (70-76,2)
1.320.608 6R/70
1.302.254 6R/76,2 5R/76,2
1.304.998 8R/70
1.302.346
1.302.247
1.302.304
1.300.906
1.320.466 5,6R/80, 8R/76.2
6R/76,2
1.320.311 5,6R/70,76.2, 8R/70
1.320.476 5,6R/70
1.320.312 5,6R/76.2
1.320.477 8R/70
1.302.356
1.302.256
1.320.459
801.991
2009.
759

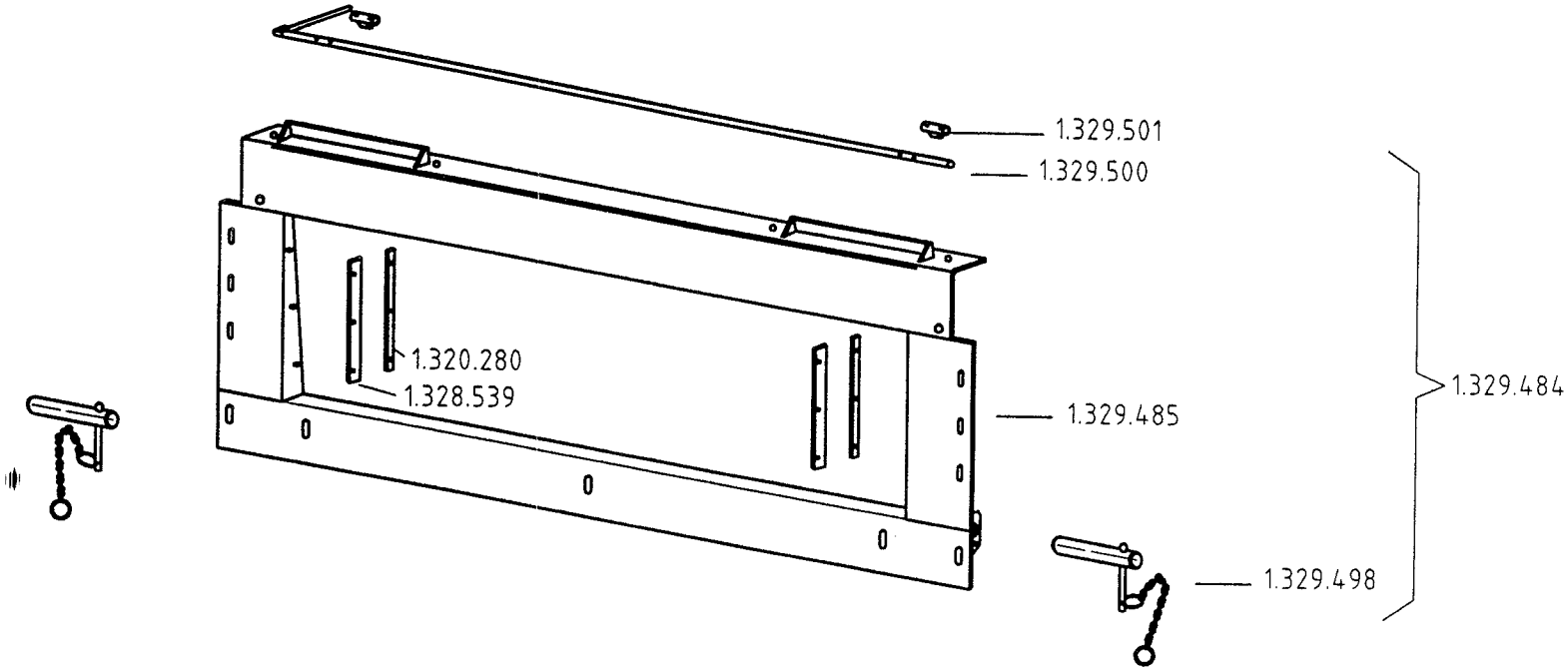

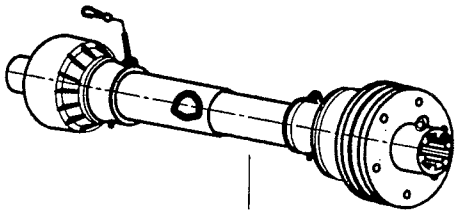

MULTIKUPLUNG : 1.318.968
Hidraulika készlet: 905.875.0K

OROS 1.318.582 5R J(D)(R) 460-610
OROS 1.318.255 5R B(L)(G) 360-480
OROS 1.314.454 6R 610-876
OROS 1.314.459 8R 1210-1876

CLAAS LEXION

2006.

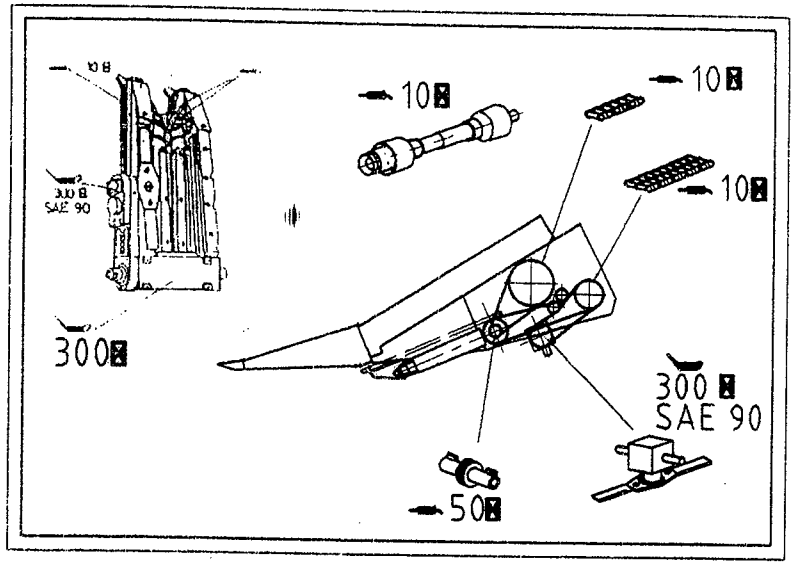

1.315.111

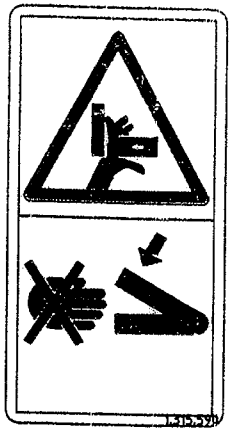

1.315.590

1.315.438

1.315.439

1.315.440

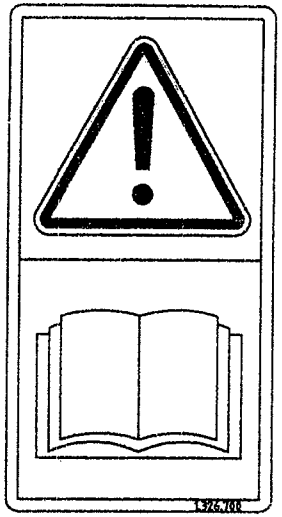

1.326.700

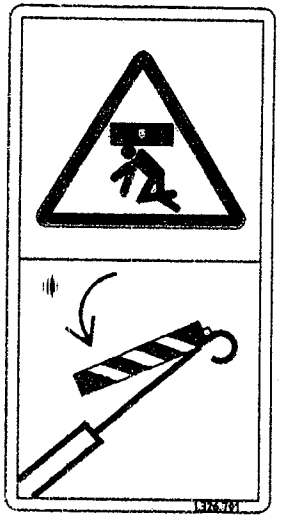

1.326.701

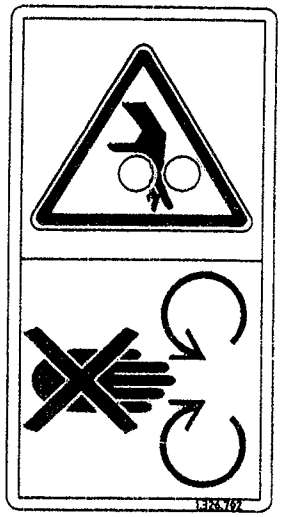

1.326.702

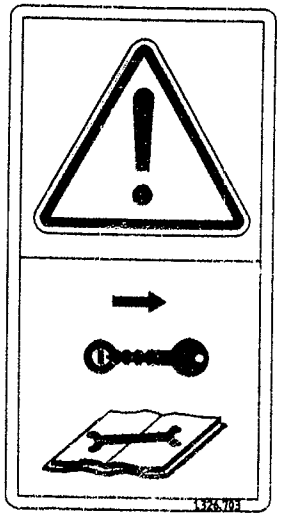

1.326.703

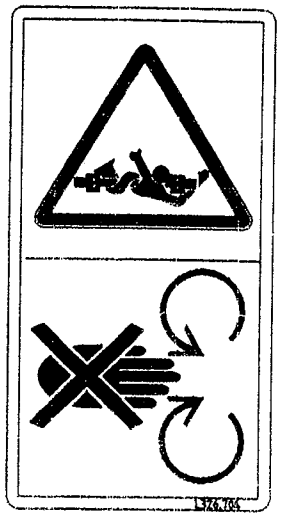

1.326.704

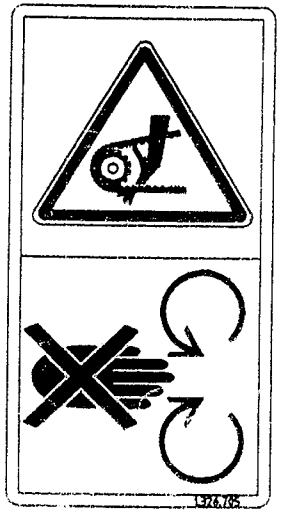

1.326.705

1.326.706

FIX

2003.

624

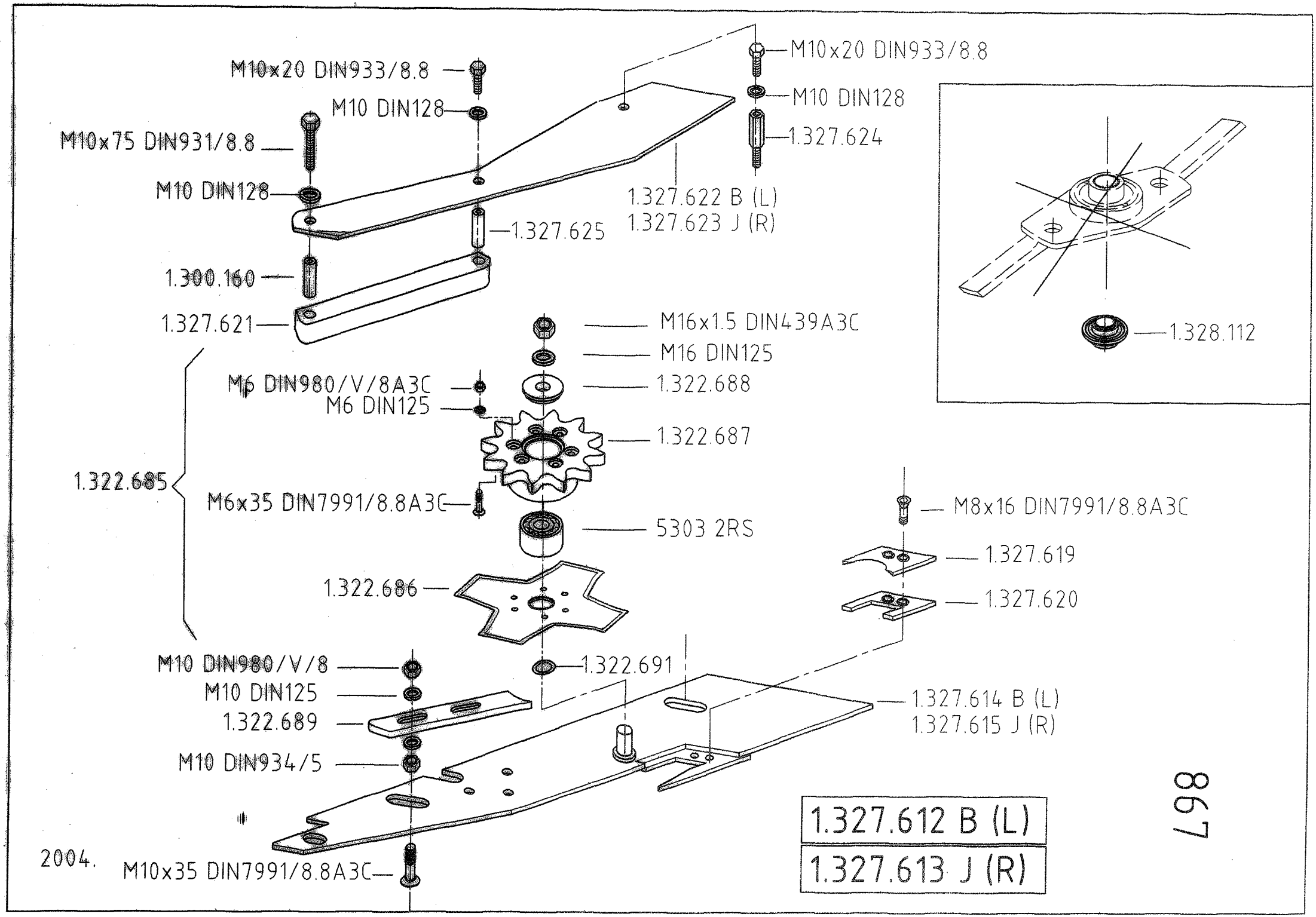
M10x20 DIN933/8.8
M10 DIN128
M10x75 DIN931/8.8
M10 DIN128
1.300.160
1.327.621
M10x20 DIN933/8.8
M10 DIN128
1.327.624
1.327.622 B (L)
1.327.623 J (R)
1.327.625
1.328.112
M16x1.5 DIN439A3C
M16 DIN125
1.322.688
M6 DIN980/V/8A3C
M6 DIN125
1.322.687
1.322.685
M6x35 DIN7991/8.8A3C
5303 2RS
1.322.686
M8x16 DIN7991/8.8A3C
1.327.619
1.327.620
M10 DIN980/V/8
M10 DIN125
1.322.689
M10 DIN934/5
1.322.691
1.327.614 B (L)
1.327.615 J (R)
M10x35 DIN7991/8.8A3C
1.327.612 B (L)
1.327.613 J (R)
867

2004.

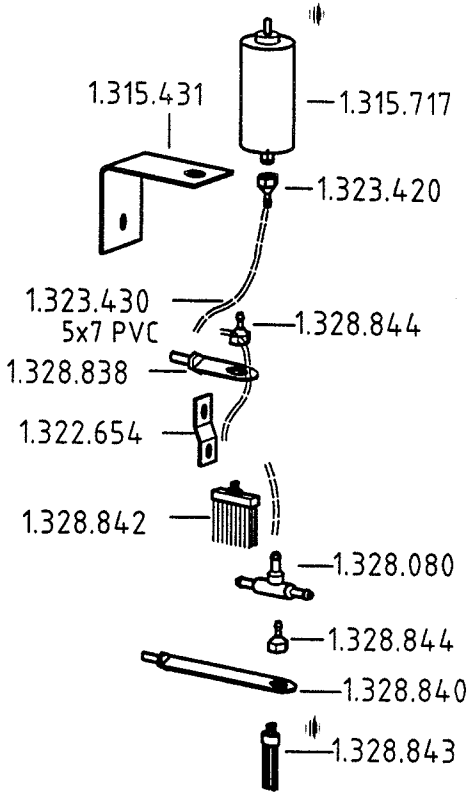

1.328.848 5,6,8R

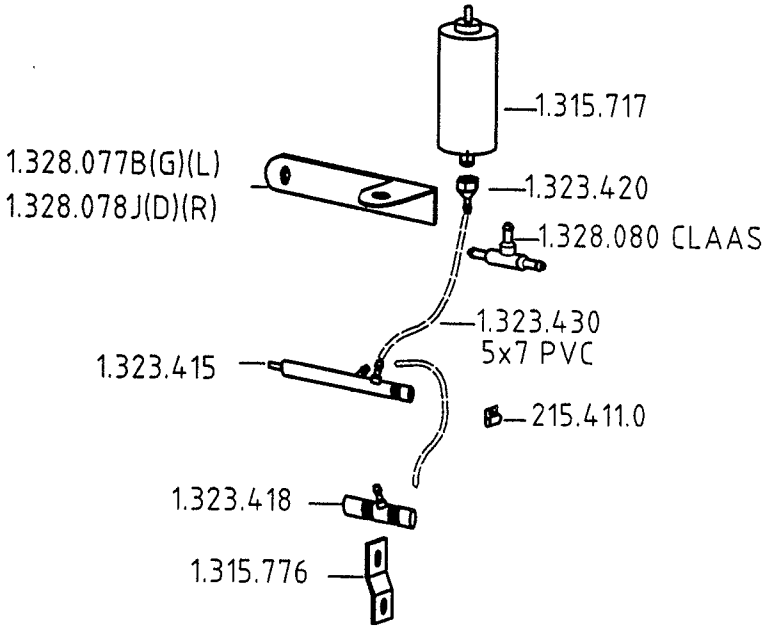

1.328.082 4+2R

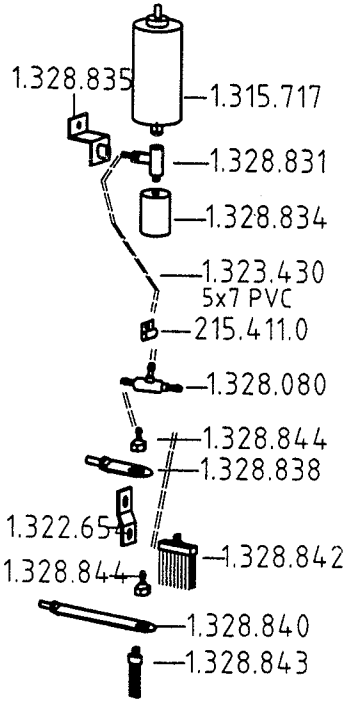

1.328.845 4+2x2R

2005.

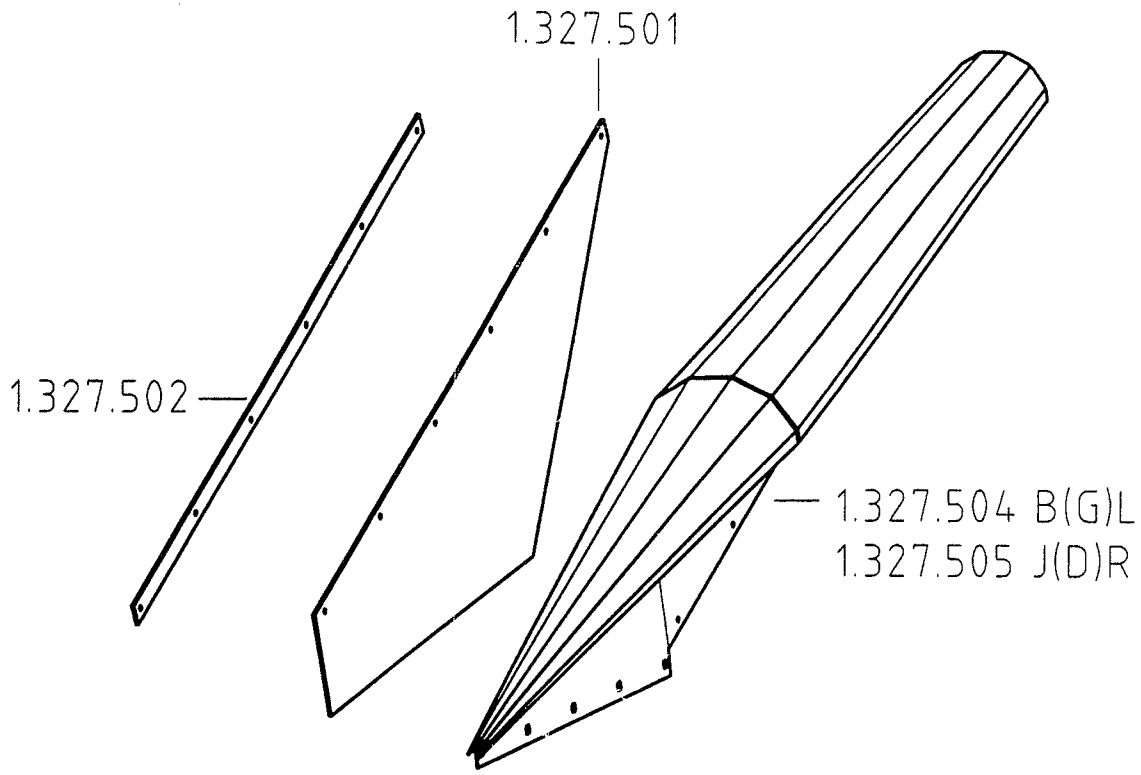

1.327.506 B(G)L
1.327.507 J(D)R

2003.